# TECHNICAL CONSULTING, CONSTRUCTION SUPERVISION AND MULTI-DISCIPLINARY ENGINEERING FIRM

ASCE
American Society of Civil Engineers

UF aci
American Concrete Institute®
Advancing concrete knowledge

CORÉGON

ESSENCE THINK

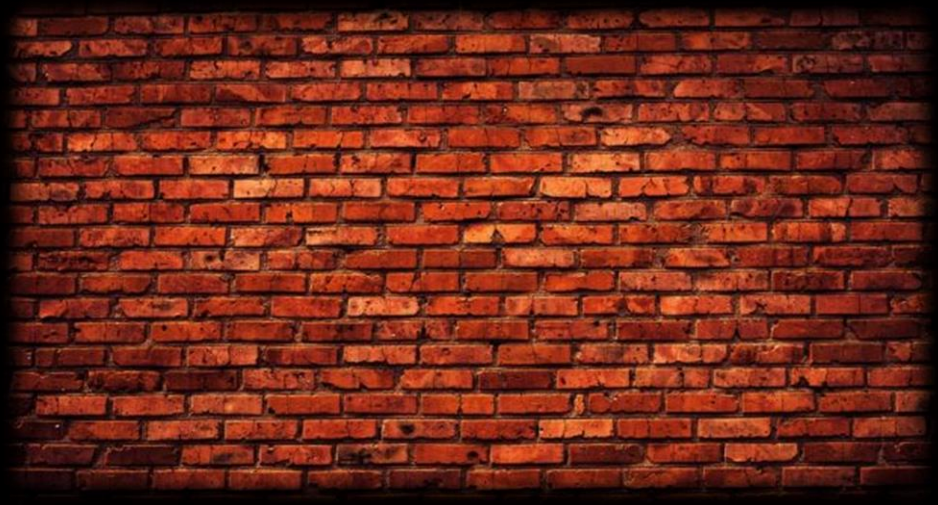

# STRUCTURE ANALYSIS OF COMPRESSED SOIL BRICKS MASONRY STRUCTURE

Mr. Amir Eshtiaghi / Structure and Civil Eng.

Mr. Benoit Cauvin / Managing director of Essence Think

EKC 2017

Compressed Soil Bricks or more commonly Compressed Earth Block (CEB):
earthen bricks compressed with hand-operated or motorized compressing machines.

If we apply any type of stabilizer such as cement or lime, then we call these type of brick as Compressed Stabilized Earth Blocks (CSEB) which is very frequently used in different countries regarding to its advantages.

the compressive strength of CEM is less than 5 MPa ( 509 858,16 kg/m²) with frequent soil types

# Structure Analysis

Thickness with load on the haunches:
T = S/10
t = thickness
S = span

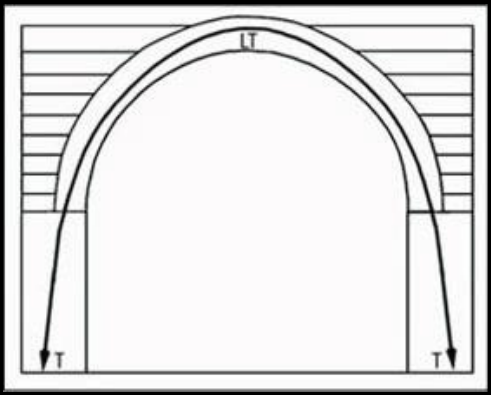


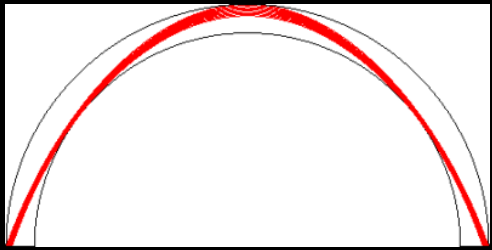

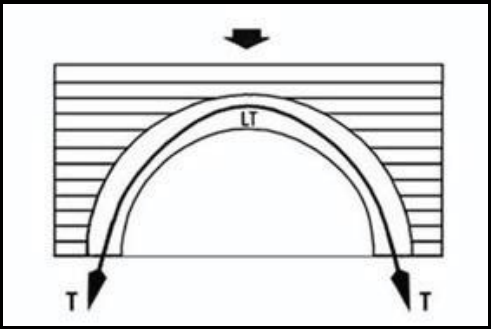


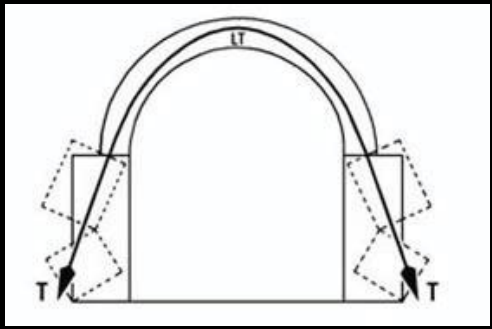

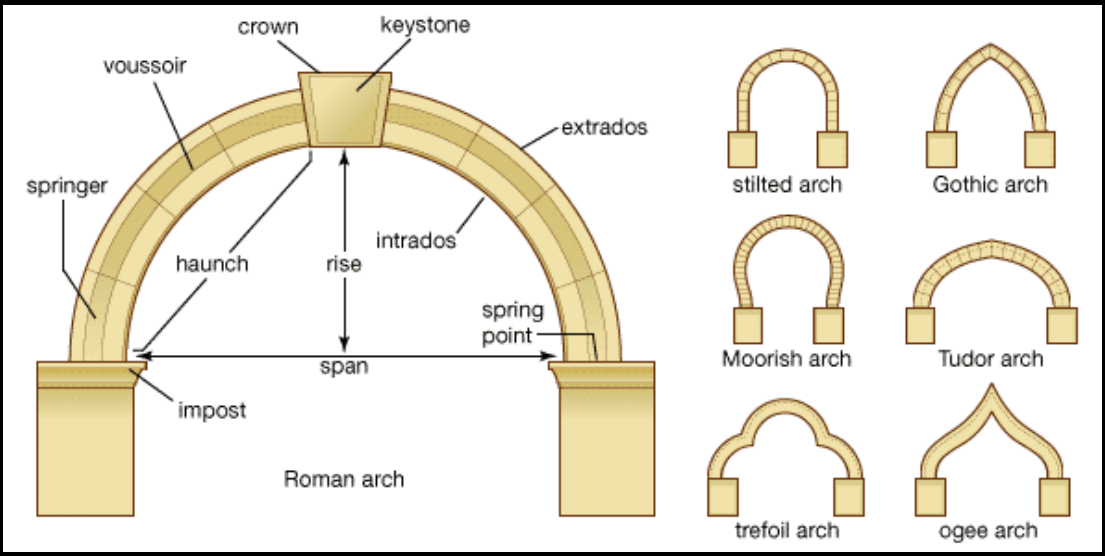
crown
keystone
voussoir
extrados
springer
intrados
haunch
rise
spring point
span
impost
Roman arch
stilted arch
Gothic arch
Moorish arch
Tudor arch
trefoil arch
ogee arch

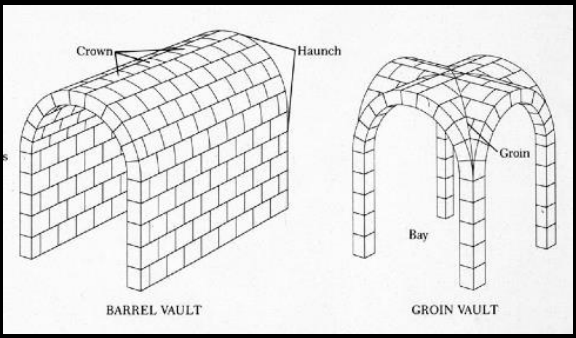
Crown
Haunch
Groin
Bay
BARREL VAULT
GROIN VAULT

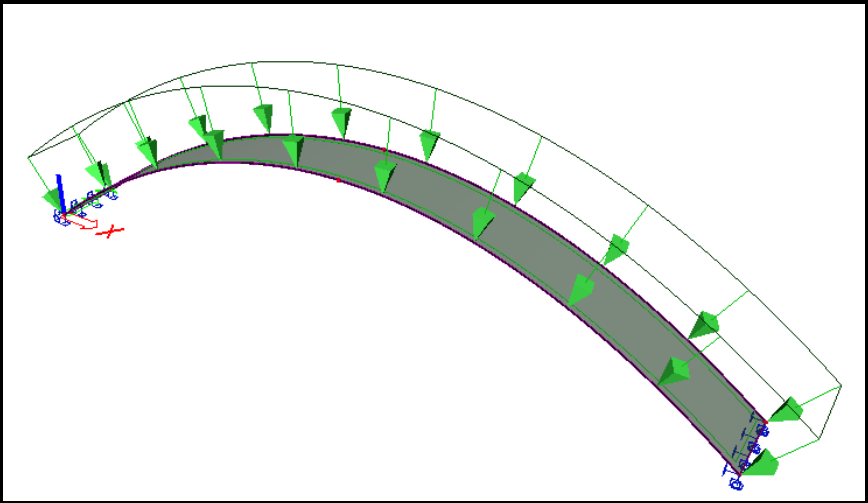

From overall vertical equilibrium of the arch, we have
$V=wl2+q\int c/2o\,\mathrm{d}s$.
For the equilibrium of the segment $PB$, we have
Vertically
$-T\sin\theta-S\cos\theta+V-w\int l/2x\mathrm{d}\eta-q\int c/2c(x)\,\mathrm{d}s=0$.
Horizontally
$T\cos\theta-S\sin\theta-H=0$.
Rotationally, about $P$
$M+Hy-V(l2-x)+w\int l/2x(\eta-x)\,\mathrm{d}\eta+q\int c/2c(x)(\eta-x)\mathrm{d}s(\eta)=0$.
After the substitution for $V$ and evaluation of integrals, equation becomes
$-T\sin\theta-S\cos\theta+wx+q\int c(x)0\mathrm{d}s=0$.

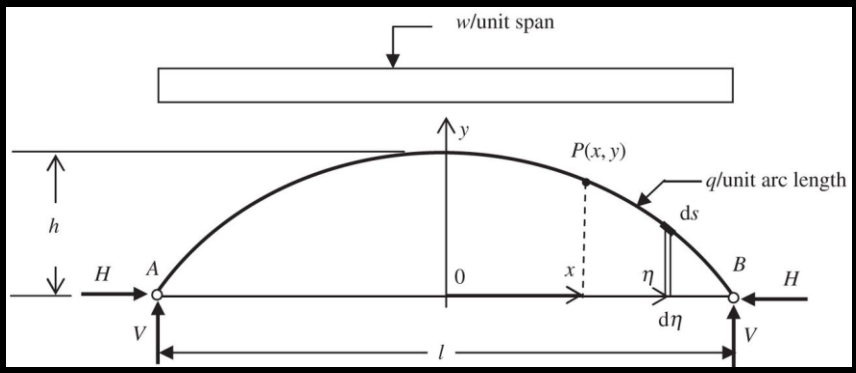


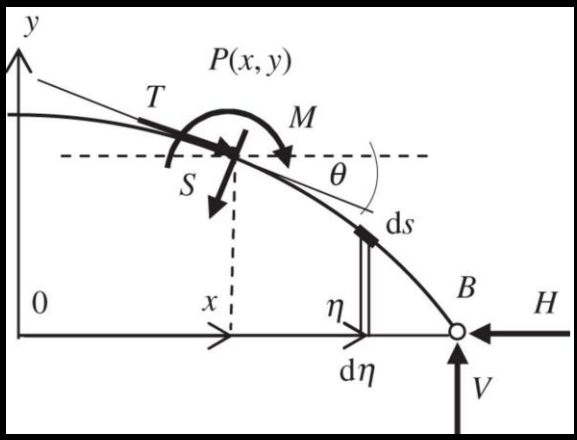

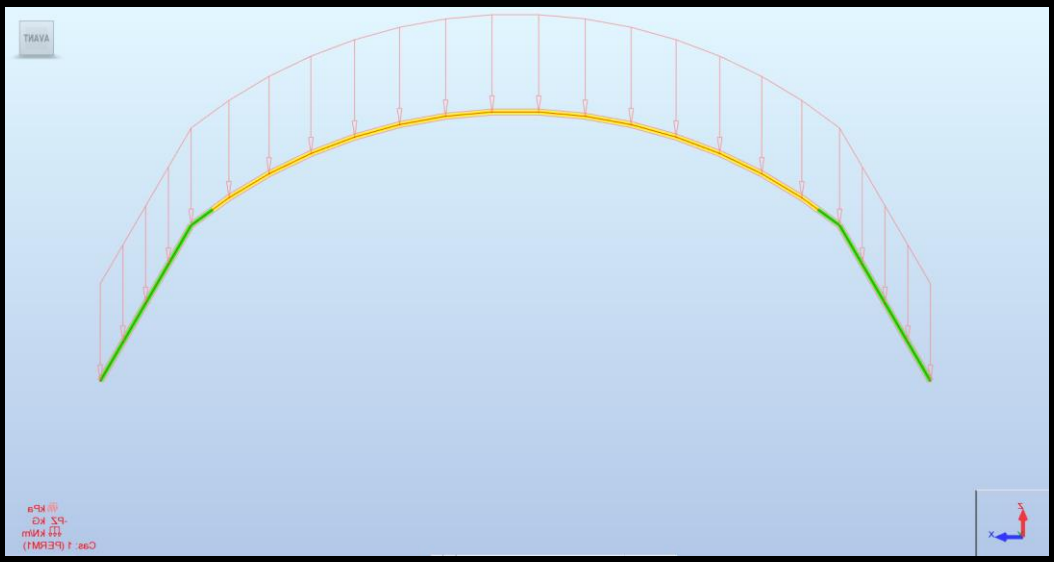
THAVA

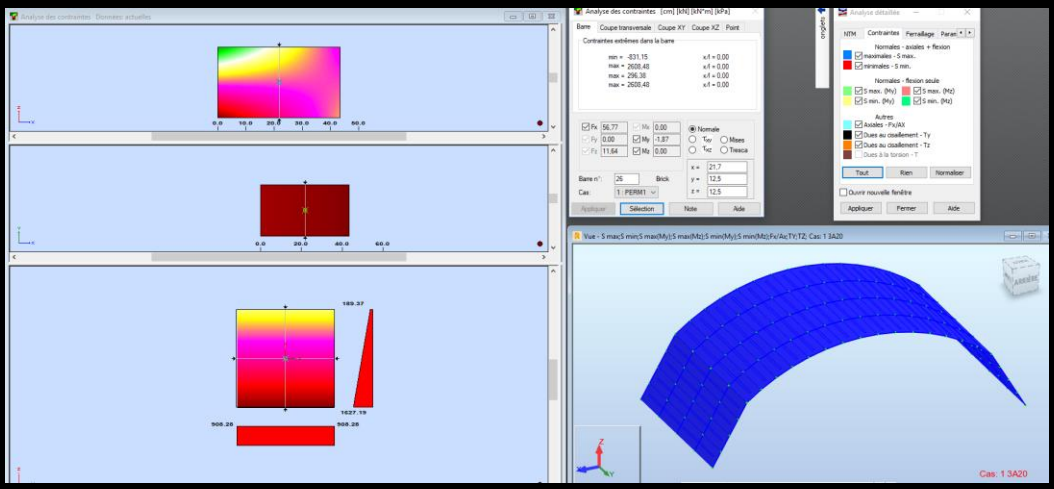
Analyse des contraintes [cm] [kN] [kN*m] [kPa]
Contraintes extrêmes dans la barre
Normales - axiales + flexion
Normales - flexion seule
Autres
Tout
Rien
Normaliser
Appliquer
Fermer
Aide
Vue - S max;S min;S max(My);S max(Mz);S min(My);S min(Mz);Fx;AxTy;TZ; Cas: 1 3A20
Cas: 1 3A20

Conclusion:

- Brick is one of the preferable construction material due to various advantages
- In several countries in middle east and Africa, is the only available option
- CEB is a compressive structure elements and it should be designed only for its compressive strength
- Equilibrium of structure and arch shape should be respected
- 3D modeling of structure will show all critical points and help us to confirm adequate architectural plan

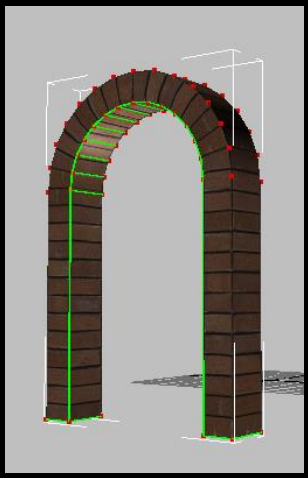

GROUPE ESSENCE THINK

ORÉGON
BET STRUCTURE

DOUGLAS
BET THERMIQUE

EIFFEL ENGINEERING

**AGENCE DE LONDRES**

ALPHA HOUSE - OFFICE 32
100 BOROUGH HIGH STREET
LONDON SE1 1LB UNITED KINGDOM
TÉL: +44(0) 2034 450 861

**AGENCE DE PARIS**

73 BOULEVARD DE BRANDEBOURG
94200 IVRY_SUR_SEINE
TÉL: 01 43 62 51 83
FAX: 08 26 38 41 76

**AGENCE DE TOULOUSE**

8 RUE HEMERA ZI LAVIGNE
31190 AUTERIVE
TÉL: 05 82 95 60 19
FAX: 08 26 38 46 41